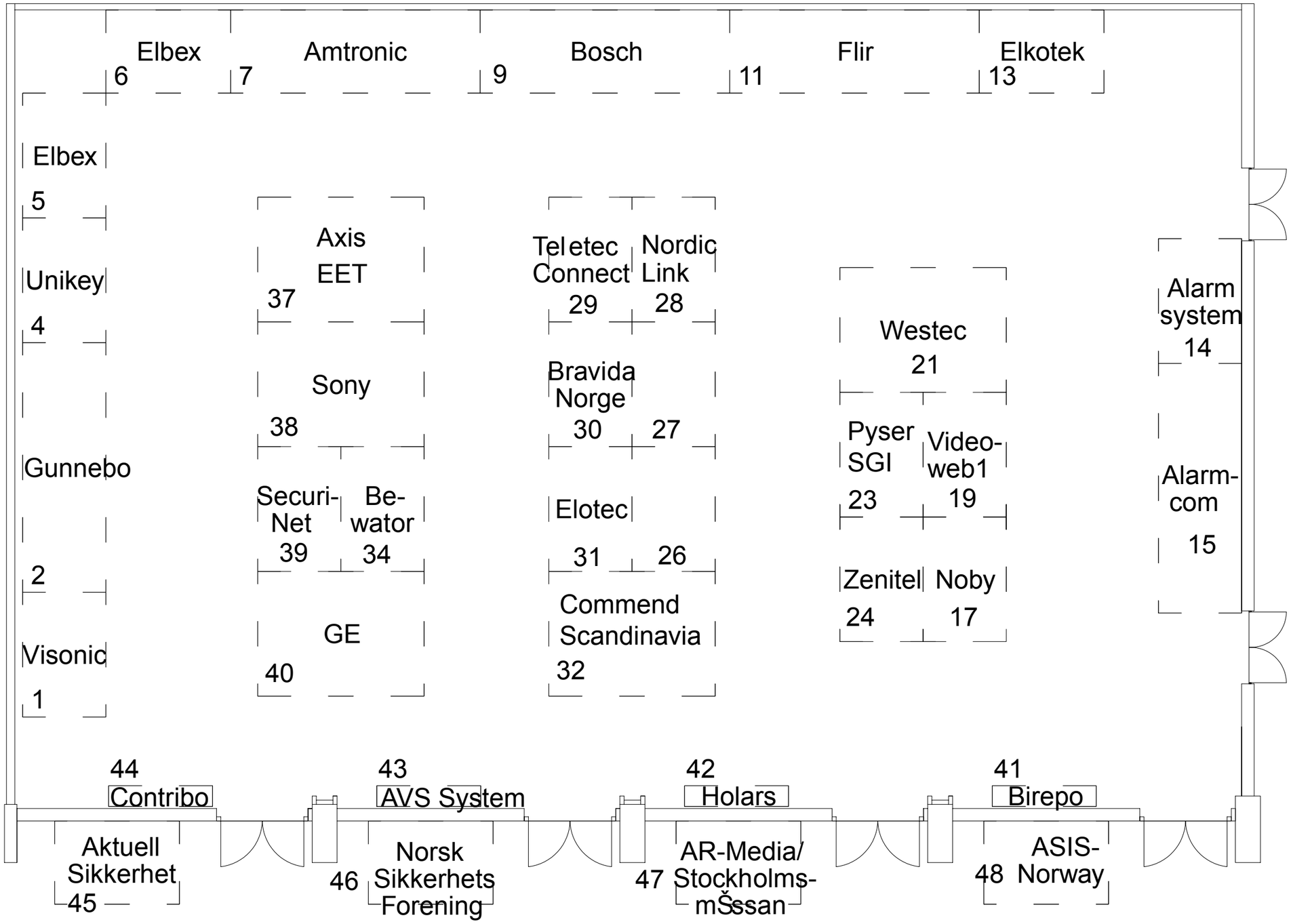
Elbex
6
7
Amtronic
9
Bosch
11
Flir
Elkotek
13
Elbex
5
Unikey
4
Gunnebo
2
Visonic
1
Axis
EET
37
Sony
38
Securi-
Net
39
Be-
wator
34
GE
40
Teletec
Connect
29
Nordic
Link
28
Bravida
Norge
30
27
Elotec
31
26
Commend
Scandinavia
32
Westec
21
Pyser
SGI
23
Video-
web1
19
Zenitel
24
Noby
17
Alarm
system
14
Alarm-
com
15
44
Contribo
43
AVS System
42
Holars
41
Birepo
Aktuell
Sikkerhet
45
46
Norsk
Sikkerhets
Forening
47
AR-Media/
Stockholms-
mŠssan
48
ASIS-
Norway